IPMS Livonia

The Bullsheet

Nov. 2015

THE BIGGEST LITTLE MODEL CLUB IN IPMS

CLUB INFORMATION

In This Issue

by: Ian P. Dow

Meeting time is at 8:00pm on Tuesday the 8th of September at the Pierson Center. It is contest month so bring what you have been working on or finished and compete with the group.

IPMS Livonia is a non-profit educational organization created to promote and share the art of plastic modeling. The group meets at 8:00 p.m. every 2nd Tuesday of the Month.

Meeting Place: The Pierson Center, Suite 5, 32625 West Seven Mile Rd., Livonia, Michigan.

Club Officers:

President

Tim Howell
(517) 861-7775
howelltm@hotmail.com

VP

Bob Blevins
(734) 664-3198
blevins5@prodigy.net

Treasure

John Kesner
(248) 880-6135
johnkesner@frontier.com

Secretary

Mike Kendel
Mkendel@sbcglobal.net

Bull Sheet Staff:

Editor in Chief Ian P. Dow

Associate Editor Jeff Edge

Club Dues

IPMS US members:

$12 Non-IPMS US members: $15
Juniors: $5

Web Site : www.ipmslivonia.org

The Zen of Modeling

By: Ian P. Dow

Gentleman,

It is no secret that I have in the past and always will in the future be a fan of the fall. The change of seasons in the fall and spring are the best but the fall seems somehow just a little better. Maybe as a modeler it gives me the excuse to sit in the basement and not feel guilty about being outside all the time. Too rainy, cold, dark blah, blah, blah. It is actually just a great reason to sit downstairs and wile away the hours. Now when we were kids our parents made us spend as much time outside as in, but even then I could spend hours absorbed in modeling. I often tell people now that its mental yoga for the mind. You are allowed to be creative, be undisturbed, allow the mind to go blank and just operate on a purely zen level. Yes, seems a little hokey I admit, but honestly we always look forward to modeling and have usually had a very positive feeling when done doing it. For the most part.

Flash forward to today's modern medicine and some of the things they prescribe for people seem silly at first but perhaps may not be as ridiculous at all. My oldest daughter just began college and one of her friends is taking art therapy. A way to help people cope with emotional issues and stress. When I heard that I made the derisive snort that all dads who know everything make and said something about "That sounds dumb, cant be much money in that line of work". Then while looking at Pintrest, and oh yes I do peruse pintrest frequently for model ideas, I saw something about coloring books for adults. It was then that I realized all art therapy and coloring does for adults is something we dorks have known for some time now. Building models is good for you because it gives you the mental break we need from the world. Maybe as youngsters we needed it more than other kids, maybe we just figured out our outlet earlier, but I do think that in today's fast paced world, and likely will only get faster, it is a very good habit to keep modeling. This will likely keep some of the marbles rolling in the right direction and will help with stress.

With that in mind we all maybe the pioneers in a new form of psychology with advanced degrees in Modelology. Never can tell. I have a friend who lives in the high rent district of Chicago who makes beaucoup dollars because he is now managing video game players much like professional athletes. Who would have ever believed that would have been a real job and yet it is. So never give up hope that maybe one day we will be treated as Gods of mental salvation because we know how to detach parts and glue them together. Never stop building or dreaming.

Ian

1/96 USS Constitution by Revell

Reviewed by :Dietmar Carstensen in Modeling Madness

History

The Constitution was in service of the US Navy for about 80 years, from 1798 until 1879.
So she took part of a long period of American history.
She sailed first on July 22nd, 1798. Than she began serving as a flagship of a little squadron in the Caribbean sea.

From 1803 until 1807 she fought against north African states in the Mediterranean. From 1809 until 1812 she was the flagship of the North Atlantic squadron.
The Constitution had here most excited period during the war against the Royal Navy in 1812 until 1815. After her successful battle with the English 38 cannon frigate the name "Old Ironsides" was given to her, because her hull withstood the cannonballs of the English frigate during the battle.On February 20th, 1815, the Constitution fought against two English frigates at the same time and conquered both ships (35 dead seamen on both enemy ships, 4 dead seamen on the Constitution). After this battle the Constitution was called widely as unconquerable.
Her wartime period now came to an end. But the Constitution again served in the Mediterranean, and from 1839 she sailed in the Pacific Ocean.

From 1844 until 1846 the Constitution sailed around the world. During the Civil War (1861-1865) she sailed as a training frigate for non-commissioned officers and until 1878 she was a training ship for midshipmen.1878 the Constitution sailed the goods for the World Exhibition to Le Havre. She stayed at Le Havre for nine months, waiting there to ship the goods back to Boston after the Exhibition was finished.That was her last long voyage. Her carrier ended in 879 at Portsmouth.

The Kit

Revell's Constitution in 1/96 is a very good kit. It is possible to build a beautiful and very detailed model straight out of the box. The rigging plans provided with my kit, already bought in 1992, are very detailed and understandable. The modeller will learn much about the standing and running rigging of a sailing ship. The kit contains plastic sails, which have a fine and realistic structure. Depending on the painting method it is possible to create very realistic looking sails, which are blown by the wind.

Construction

Weathering of the sails have been done here by using extremely thinned acrylic paint from Tamiya. Yellow, brown and white with a high amount acrylic thinner have been mixed to a dirty brown-coloured substance and have been applied to the sails by using a thick paintbrush. Depending on the effect you prefer to create sails, which like old and weathered, you can apply more paint on the edges and corners of the sails. Before this mixture begins to dry, rub it on the surface of the sail by using a piece of soft paper until you get the desired effect.I decided to show the ship under full sail and therefore rigged also the studding sails. The ratlines are pre-shaped from thin, flexible plastic and have to be cut into the appropriate dimensions before placing.

The ratlines have to be tied up at the mast tops and on deck at the hull dead eyes,the topmast and topgallant ratlines corresponding at crosstrees/topmast crosstrees and on mast top deadeyes/topmast crosstrees. The plastic-made deadeyes look like of rope if painted carefully with the corresponding rope colour.

The ship has been built with all the parts the kit provided. However it was important for me to add some extra equipment which I built from scratch, such as anchor buoys, cannonballs, buckets for fuses, wooden barrels and additional rigging of the cannons on the upper deck.

The nets on the rails I made from synthetic mesh instead of using thread as advised in the instruction sheet.

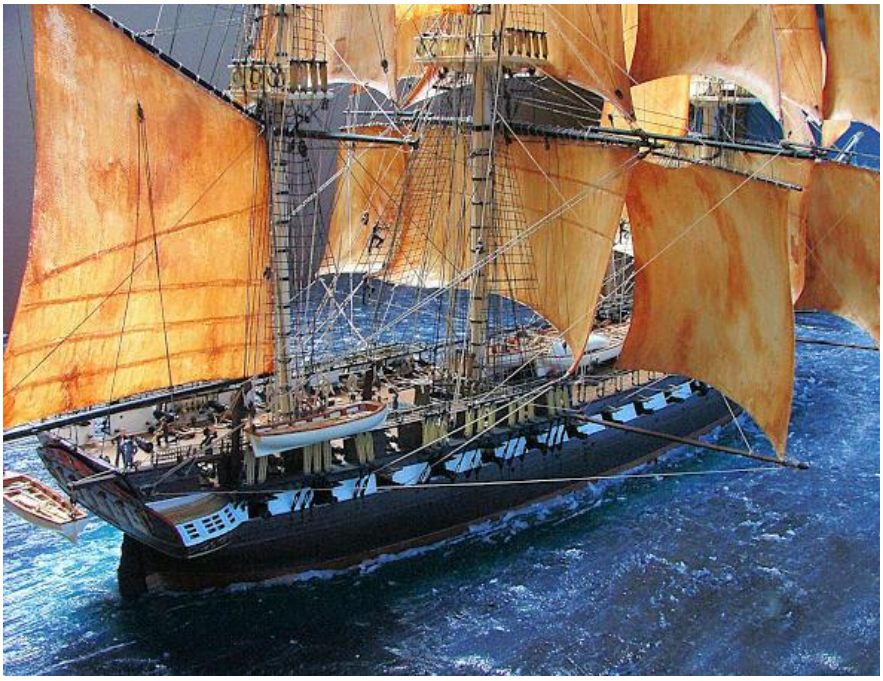

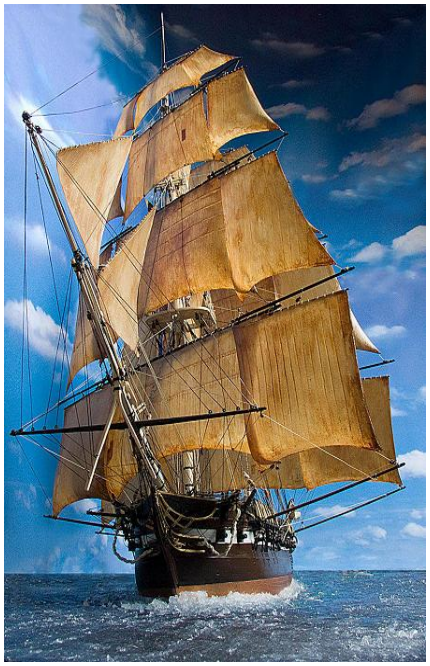

The cannonballs were sanding from little plastic pearls (normally used for necklaces). The anchor buoys and buckets for fuses were made from Evergreen styrene-strips.

I advise you to build the topgallant masts from wood (scratch). From plastic they are very weak due to their small diameter. This is a problem during rigging.

I did not make the effort to build the topgallant masts from wood afterwards. By rigging these masts tight from fore and aft I was able to avoid bending them.

On my next model I definitely will make them from wood, because this give them more stability.

There were 20 crewmembers attached to the kit. They are high quality. If you decide to build the ship as a waterline model in action, you will need the crewmembers.

A ship on the sea without showing any crewmembers on deck, would looks a little like a ghost ship. After the crewmembers have been placed on deck, climbing the ratlines and standing on the yards, you soon will recognize that 20 crewmembers are not many. So I decided to buy some more figures.

The extra figures are three sets of each 6 working men from the brand Preiser.

They have been altered and repainted according to their purposes on deck. One figure was altered into a seaman missing one leg, who is walking on starboard side of the upper deck on crutches.

Delivered with the kit are four different sizes of rigging thread in black and brown.I bought a lot of extra rigging threat, but did also not try to save as much as possible and let the remaining ends longer than necessary in order for easier rigging. On deck the ends were first cut off shortly behind the knots, before the coiled-up ends were attached afterwards in a manner which makes it not visible that the ends had been cut off before.

It is very difficult, if not impossible, to coil up the remaining ends of the thread whilst the rigging is tighten on deck.) Before attaching the ends to the pins afterwards they have to be coiled up, which can be done very realistic by using the following technique: First roll a piece of thread around a round object (pencil or brush). Than brush it with Micro Crystal Clear and let it dry. When dry you easily can shape the thread into the desired form and glue it on deck.

You can build the model with closed or open gunport covers. If you want them open, you should open all the gunport covers and have all cannons ready, because open only a part of the covers would be unrealistic. All cannons under deck are rigged following the instruction sheet, using the same method as on deck. However the rigging of the cannons under deck is hardly visible after the upper deck has been attached.

The cannons on deck have got additional rigging (not mentioned in the instruction sheet). The additional cannon rigging on deck is very visible. The effect is worth the extra work. However I did not scratchbuild the blocks as part of the cannon rigging. In this scale they are extremely small and you can hardly build them.

The captains cabin pieces, also delivered with the kit, are also hardly visible when the hull is assembled. Maybe you would see something, if a little bulb would be installed inside the hull. The windows at the stern are fine moulded. On the inner side of the hull a transparent plastic sheet, delivered with the kit, can be glued before assembling the upper deck.

This creates the effect of real windows and looks very realistic. (I have seen painted windows on expensive wooden models.) The engravings at the stern gallery, on the galleon and the hull are very fine moulded by Revell. Careful painting will also lead to a very realistic effect.

Six different sizes of blocks are in the box. I cannot imagine making them better from scratch. Like each other part of the model I also painted all the blocks to create a wood-like effect.

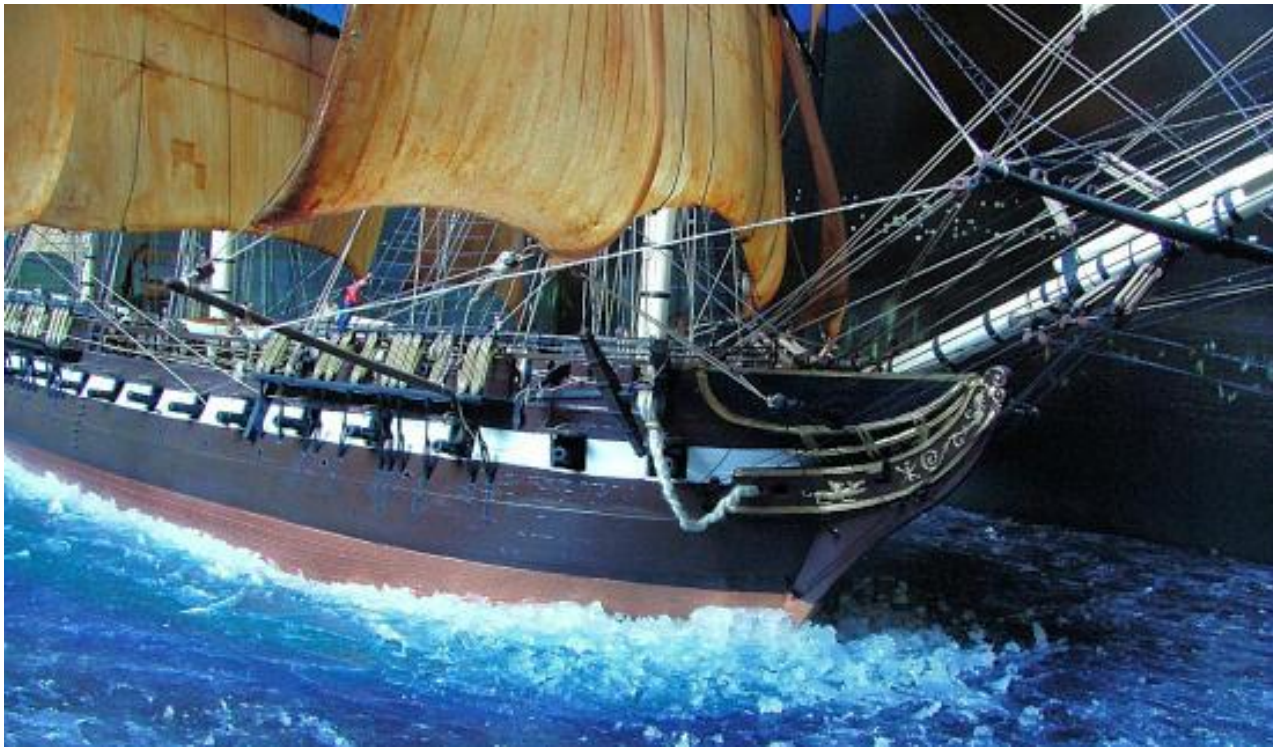

The wooden decks are well imitated on the plastic and you can create the effect of real wooden decks by using the well known methods such as painting, softly grinding, dry brushing etc. Unfortunately I grinded at the beginning of my modelling the decks almost totally smooth, because I had thought about a different method to imitate the wooden deck.

Unfortunately this had not the desired effect, and now, after knowing all the different methods like dry brushing and so on, it is too late to rely on them.

I have to be satisfied with the result, which happily still let the deck looks like from wood!

I used some general modelling methods, which also used by aircraft modellers. Books about plastic modelling of sailing ships are very hardly, if not at all, to find. The best sources here are modelling forums.

One important thing for me, self evident for most of the modellers today, was the use of superglue. Without superglue and its good adhesive qualities, also on painted areas, it would have been not possible for me to build this model. Also very helpful was the accelerator to let the superglue set immediately, preferably whilst gluing difficult rigging constructions.

The main yard broke, after the rigging was already far done. Without superglue together with the accelerator I most probably would have given up all the modelling here.

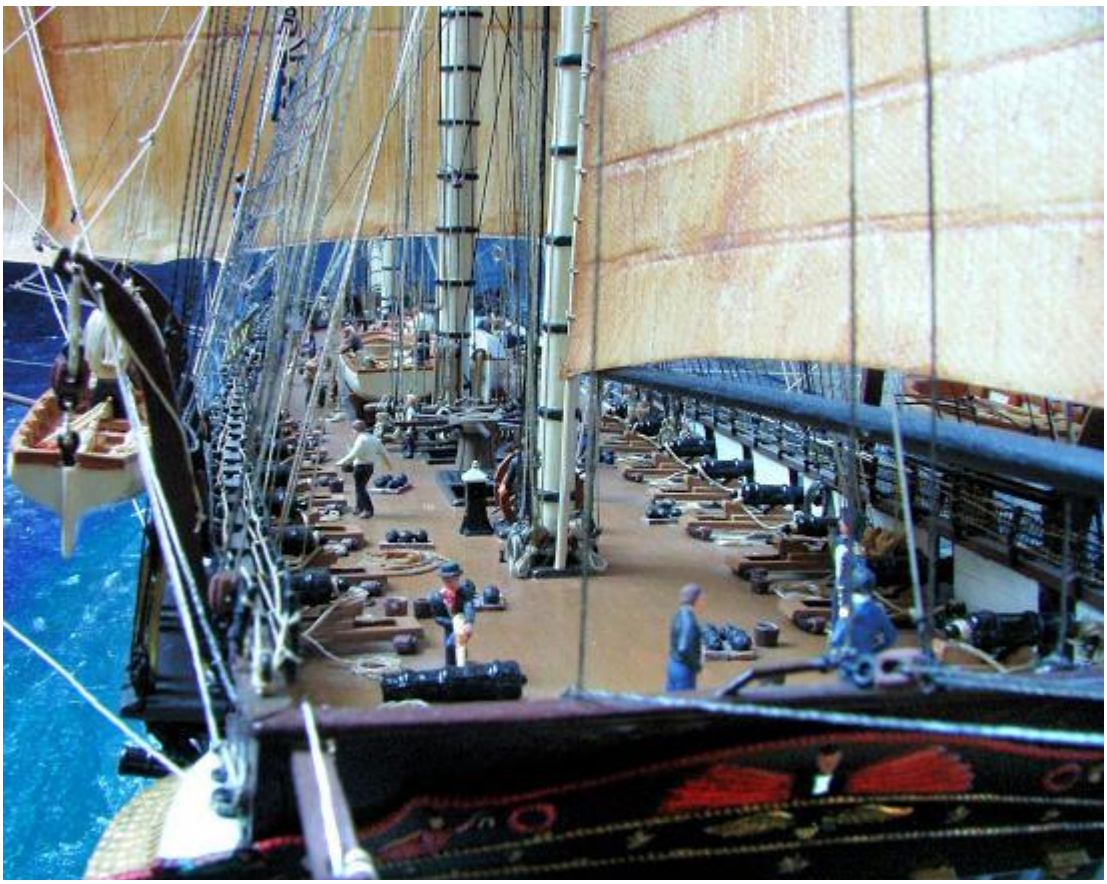

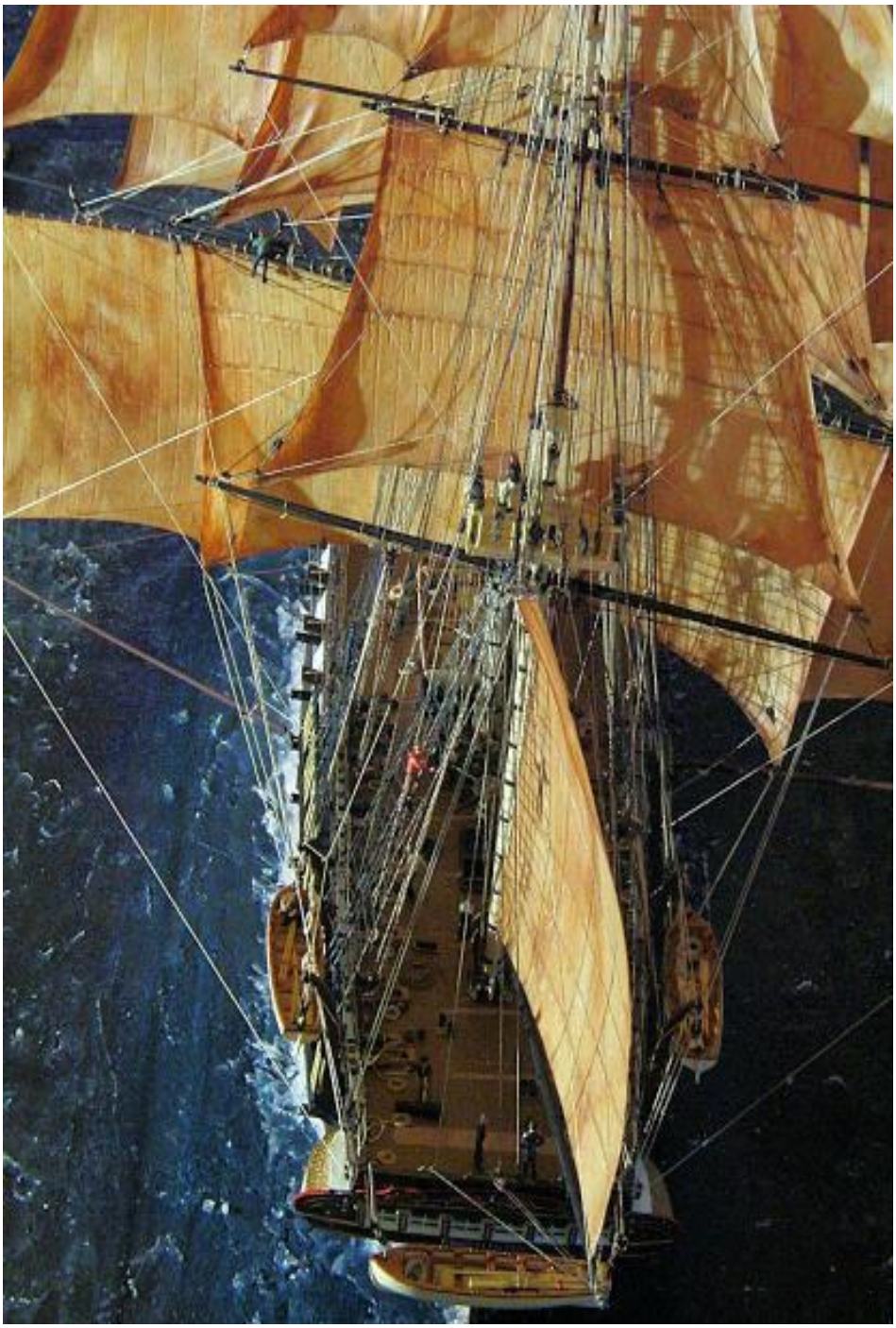

Sea Construction

To imitate the sea I used as a base a styrofoam plate. This plate first was painted with water colours in blue and turquoise. Near the hull of the ship – due to the water extremely mixed with air – turquoise coloured water looks most realistic; the more the distance from the ship increases, the more the colour of the water tends into dark blue.

On the ready coloured plate silicone was added by using a palette-knife. With a teaspoon the waves were moulded into the fresh silicone corresponding with the direction of the wind.

The foam at the bow and alongside the hull can be moulded into the silicone by using a tooth-pick.

When the silicone is dry you can paint the crests with white colour.

The hull has been lowered into the styrofoam mold up to the waterline, and has not been cut. Cutting the hull at the waterline I considered too risky, since I only decided to show the ship as a waterline-model after the masts and rigging already had been finished.

Photos made with Fuji S5000, at daylight as well as at artificial light. As a background I used a poster, which I bought in a shop for rail-modelling accessories. (There were no changes made to the photos by Photoshop software, which would show the model on the photos different from the original model.)

Conclusion

It was not my intention to let my Constitution looks like the original for hundred percent,but found fine detailing and effective presentation most important. Today no one knows how the Constitution precisely looked at a certain period during her long career.For me it was important to let the ship looks like a real sailing ship at full speed at sea. The kit did not disappoint me in any respect.

This kit can be build by a careful and concentrated modeller into a top model of this famous ship. The scale 1/96 allows extensive detailing.

Handy hints and tips for boat model makers.

How to make a good model.

After the ecstasy of your relatives from your first ship in a bottle subsides, try to evaluate your model: is it so good indeed? How to assess it? Of course, I don't mean money value since it is priceless, but a historical importance of it, even the importance for world culture (don't be surprised: your masterpiece can live for hundreds of years!).

While it is impossible to value a ship in a bottle as a piece of art, we can judge about its importance as a ship model. Imagine that you break that bottle and then look at your model; if it still looks perfect, then accept my greetings – you did a good job.

Although do n't try to make anything as long as it is in a bottle because you will only waste your time and energy. A bottle should just add even more charm to your model.

Making details of a miniature ship model.

Rope threads.

To find good threads for ship models is not that easy as it may seem since even the thinnest ones often turn out to be too thick. You can use hairs, synthetic or silk threads, but they are not very easy to work with. That's why I'd recommend pulling some threads out from a piece of cotton fabric.

Before using them, soak them in liquid PVA adhesive and wipe them immediately; after they dry out, they will look sleek and your model will not resemble the Flying Dutch which had roamed in seas and oceans for dozens of years.

Wheel.

Ships got their steering wheels in the 18 th century; before that helmstock was turned with a vertical lever stock. After steering gears appeared, traction from steering engine was transmitted to the wheel with the help of steering ropes.

Steering gear s of some ships were covered, and of course, making such a wheel is much easier than an opened one w here you have to show all the details.

The main part of the steering engine is a wheel. To make it, you will need a few pieces of copper wire and a copper ring. Wind the wire round a bar of a desirable diameter and then cut along the spring that you get. Now you have a lot of identical rings.

Spokes are made of copper wire as well. To make it look like wood you need to heat it using a certain temperature, since during the process copper change its color from golden to black. A layer of nitro lacquer will fix the color. The assembly of the wheel is carried out exactly on that place of the steering gear where it is on your working drawing.

Working with such tiny parts, a boat model maker faces some problems; for example, you have to constantly hold a detail which wants to slip off all the time, and you'd better not use clutches, because you can easily damage those little things. There is a way to handle it: attach a piece of sticky tape to a wooden bar and drop a bit of glue, then put a part you are working with on it. Now it is fixed. To remove it just use a sharp knife.

Now, using a magnifying glass, you can start assembling the wheel. First attach no less than 8 spokes and then the ring (pic. 38). You still can use PVA-glue adhesive, just make it more liquid. After assembling the wheel, join together the rest of the parts of the steering gear and put it into a designated place. Do not forget to install a steering rope.

Using this method, you can even make a wheel on a scale of 1:700, however on bigger models beginning from 1:500 you can try to make it of …wood! First of all, find good wood for it, for instance, apple or pear wood. Take a thin plate (0,2-0,3 mm), moisten it and cut into thin straws. Make sure your knife is very sharp and the cut goes along the grains of the wood.

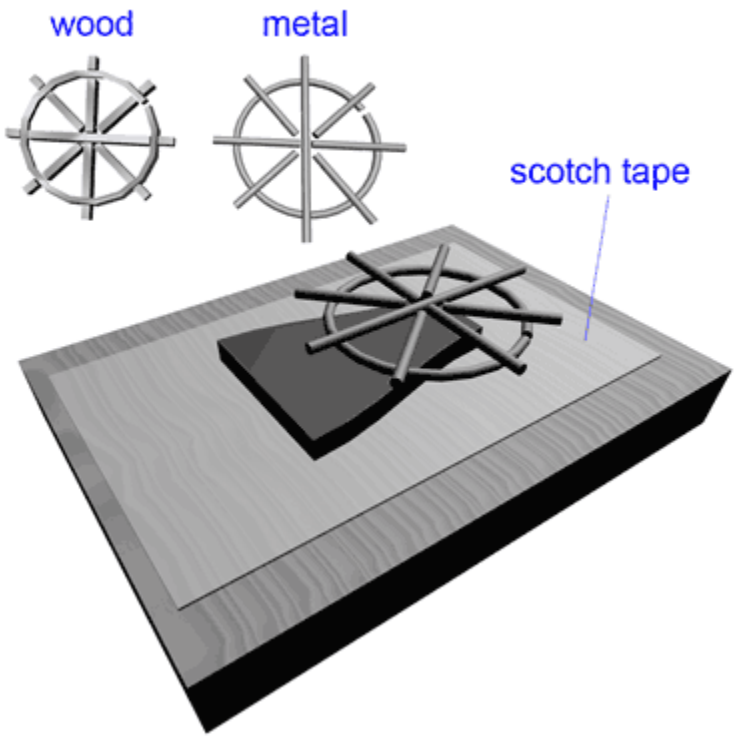

pic. 38 - assembly of a wheel

Choose the thinnest and the straightest one, soak it in hot water for 10-15 minutes and wrap around a metal rod like you did it with copper wire. The straw will not break if you cut it exactly along the grain. Wind a piece of paper round the straw to fix it before it dries out. After drying take off the paper and cut along the straw spring. Join the point of

rupture with some glue. The strokes are cut from the same straws, but make them shorter as you need to be able to put them inside the rim. Prepare handles by cutting off little squares out of the straw.

Neatly made wheel will only beautifies your model since an image of a ship closely associated with a mustached boatswain standing at the steering wheel.

Sky lights, windows and portholes.

The windows of a ship can be either square or round. The former are rectangular glasses with brass or bronze frame; the latter have metal frame. Some hatches used to have necking of portholes or glass lids to let the air in when they are raised. They are called skylights.

Miniature portholes are made of brass rings by coiling thin wire round a round frame and cutting it along. Make in the same way framing for windows, except for it should be square. Wrap the wire tightly round the frame. To make the angles sharper, use broach file. The ready windows and portholes are glued to the model; color them black as it is dark inside the cabins (unless the light is on) (pic. 39)

pic. 39 – skylights

You can make the simplest skylights in the same way by sticking rings to a wooden base. A more complicated task is to make them with wooden frames. For that you can use apple or pear wood; and your work piece should have a profile of a future porthole.

Now you will need a rectangular or square stamp , its size should coincide with that of the windows. It can be made of metal rod. You can also make a few different sizes and add a handle to each of them.

Mark the location of the windows on the work piece and make cuts across the grain to avoid wood mashing. Then press it with a stamp of a suitable size (pic. 40). If the work is done well, you will see very thin windows with frames between them.

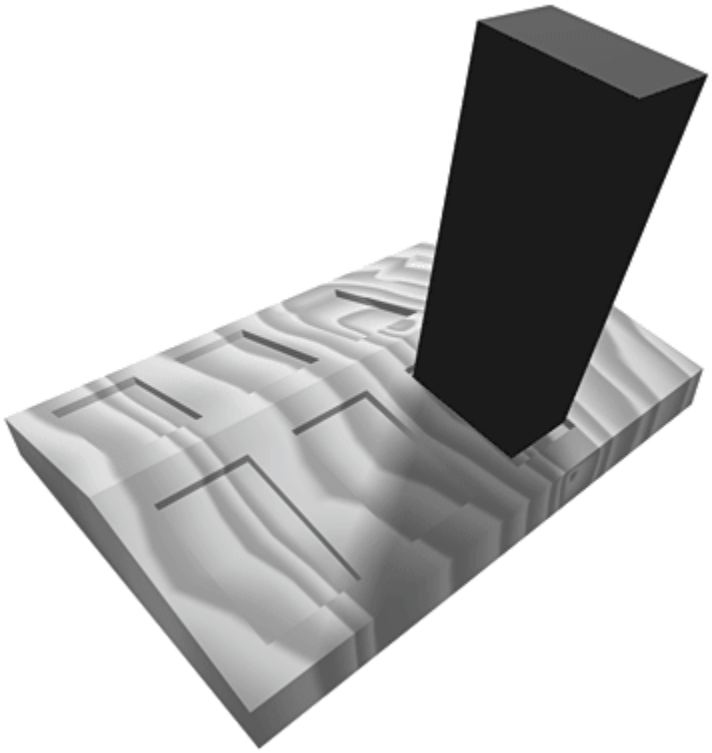

pic. 40 – using a stamp for making miniature wooden skylights

This method can be used for making gun ports, windows, doors, and other details.

Cannons.

The main parts of cannon are gun barrels and gun carriage where it stands. You will need to reproduce them.

For gun barrels take thin metal pipes no thicker than 1 mm. Heat them to get a black color and make them soft. Then cut the pipe into pieces (I'd recommend a bar with slots which you can see on pic. 41) Put a pipe into a slot and fix it. After removing burrs, heat them up again, it will restore the color.

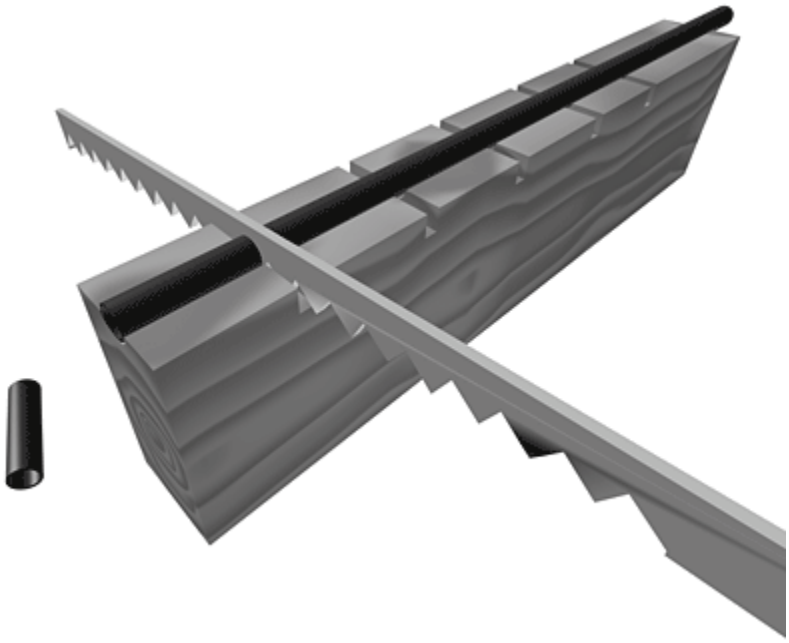

pic. 41 – to cut the pipes into pieces is easy using a wooden bar with slots

To make a breech, you will need little metal balls: heat copper wire holding it vertically; it will melt forming small balls on its end. When cutting them off, leave a tiny tail to attach it to a barrel. Preparing such balls is a very difficult task, so you'd better make a lot of them at once and then sort out by size. All you have to do now is to glue a ball to a barrel, and your cannon is ready (pic. 42)

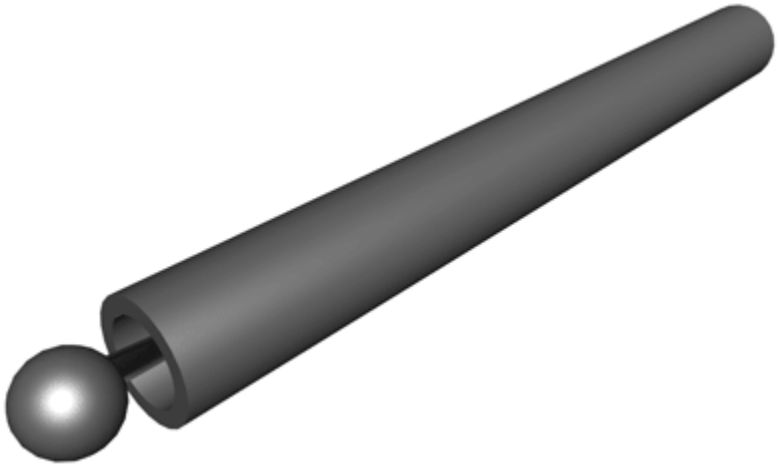

pic. 42 – a gun barrel model

Of course, to reproduce a very accurate copy of cannon, you will need a turning machine, but using this method even a beginner can make nice gun barrels.

The sides of a gun carriage are cut out from wood; glue little wheels to them (which you can cut out of a round wooden stick). The sides are glued directly to the gun barrel (pic. 43). You don't' have to make a gun carriage frame as it is not seen on such a small model. But if the size of the cannon allows you, you can make tiny blocks and tackles using thin threads using thin threads.

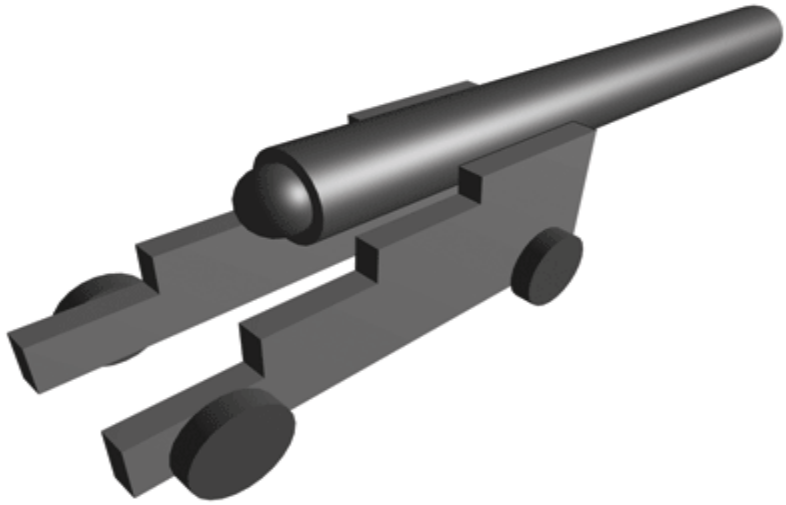

pic. 43 – the gun on a mounting.

Anchor.

The modern look of the anchor dates back to the V century BC. In the ancient world they were made of wood , and only in the Middle Ages an iron anchor with wooden stocks appeared. The shank of an anchor was made of several rods welded together.

To make an anchor, you will need the same metal pipe that you used for cannons. Cut and process them as it was described above. The beaks of an anchor can be made of metal wire; squeeze the ends with flat-nose pliers and shape them with a broach file. You can attach the beaks to the shank by wrapping the wire round the beaks and joining together the loose ends. Drop some glue on them and insert them into the shank. A ring made of wire as well is attached to the other end. Besides, such a design imitates a ring serving very well. The ready anchor should be heated to get a dark color; you even don't have to paint it.

Now you need to make a stock. Glue together two wooden slats with a slot for the shank (pic. 44). If the size allows you, you can make balancing band of a stock of metal foil or threads.

Attach a chain or a rope, and the anchor is ready.

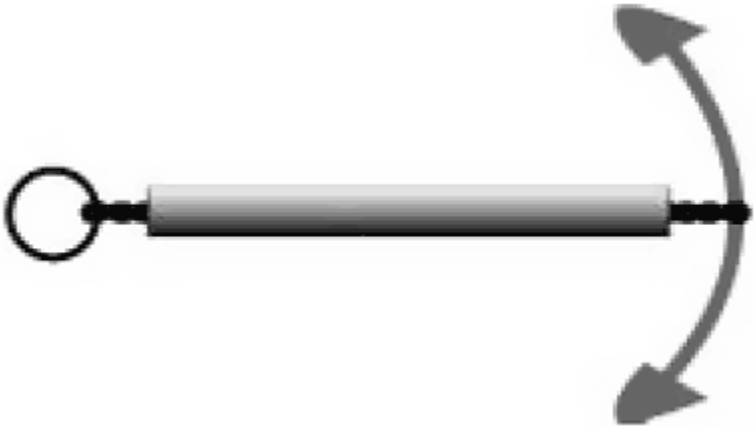

pic. 44 – a model of an anchor

Rowing boats.

Since the old times, boats have been used for carrying people and goods. There exist various designs and names, such as quarter boats, yawls, whaleboats, and other. In the

past the rowing boats were placed between a mainmast and a foremast on the waist deck. Later, they were hung up on cranes on the stern.

However , to make a good-looking boat is not an easy task, and often you can see a neat model with crude boats. Actually, they can be made of different materials, but in my opinion, only moulding will allow you to create accurate and fine rowing boats. This method is simple even for a beginner. First of all, you need to make an ingot having a shape of a future boat. Cut it off a piece of wood and get it on a stick. You can make a few ingots at once; they will be useful for your future work.

The best material for that is polymer film which easily changes its shape when heated to 100 º Celsius. Use plastic food boxes (pic. 45); the thickness should not exceed 0,1 mm, or else it will not be able to reproduce the shape.

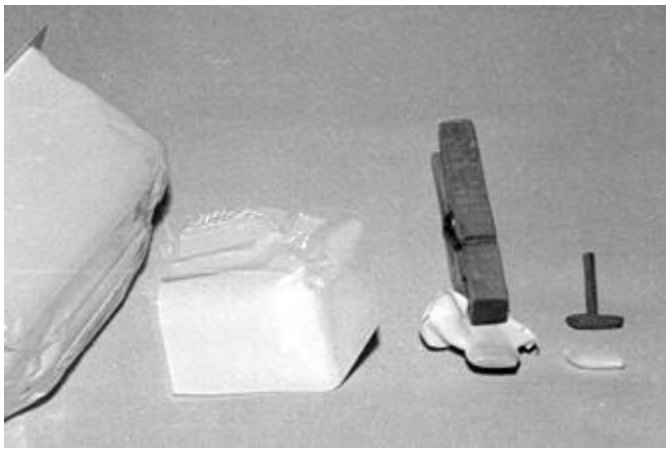

pic. 45

Take a piece of the polymer film, cover with it a wooden ingot and fix it with a clip. Now pour boiling water over it to make the film get the shape of a boat. Then just contour the boat, paint it and attach the missing details. To make painting easier, cover the boat with acetone using a soft brush. After that the surface becomes rough which allows the paint to cover it evenly. Finally, glue thwarts and put a few oars, and your accurately made rowing boat is ready.

Moulding enables you to make small details, while making big ones requires more efforts. Using that method you can make some other details, such a s tops of old ships, lampshades, parabolic-dish antennae of modern vessels, bells and many others. You will learn about some of them below.

If you do not want to use plastic, try aluminum foil. Simply squeeze it with your fingers though it has to be primed before it can be painted.

Stern Lamp.

Old ships had big, richly decorated stern lights with a lot of glasses inside; they were put on a metal stock on the stern. Flagships had three lamps; one was in the middle, and two on the sides. Ships of an admiral or a commander had one more on the top.

Of course, it is not easy to reproduce all the decor on those tiny models; however, if you make some efforts, you can get some good results (pic. 46).

pic. 46 – a stern lamp

To begin with, make a little ball on one end of a piece of copper wire using the method described above; it will be a base, and the wire will become a stock. It will also help you fix it on the model. The ribs are made of copper or brass wire. You can imitate décor by

squeezing the wire with pliers which gives it a nice print or just twist two pieces of thin wire.

Glue the ribs to the ball from different sides (usually four ribs are enough). Now make a lampshade using the same method of moulding. The form is made of metal stick with a few panes on the butt end. The rest of the work is the same as for making boats. The ready lampshade is glued to the ribs from above and painted silver or bronze; you can decorate it with a ball or a little capstan made of thickened paint.

Tops of old ships.

Old square-rigged ships had tops in the shape of a basket. Such grounds helped operate the sails. Very often there were riflemen on the tops during a battle armed with bows, arbalests and later fire guns. With time, the shape of the top changed from a basket to an almost rectangular ground.

To make an accurate copy of a top , prepare a few thin wooden rings; they can be made of redwood veneer. Choose a piece with clearly seen grains, then sandpaper it to reach the thickness of 0,2 – 0,3 mm, after that wet it and cut into thin straws. Make sure the cut goes along the grain otherwise the straws will break when bent. Soak the straws in hot water for 10-15 minutes to make them more flexible.

For a basket you will need rings of different diameter. To get them, wet straws are wind round sticks of different sizes and fixed with paper. After they are completely dry, take the paper off and cut along the spring into rings. Glue the rings joint to joint. The bottom can be made of redwood as well, just remember to make a hole for a mast in the middle.

Now prepare a good deal of small squares using the rest of the straws; they will be the poles of the basket. Glue them around the bottom; put a ring on the first row and then glue another row; repeat a few times. The upper ring of the basket is usually bigger, so when making the last rows you can use long strips instead of squares.

Ladders.

Ladders are used for people to get from upper lever to lower one and vice versa; there exist inner ladders joining upper deck with lower one, and outer ones leading to the board.

It is not easy to make those ladders on a scale of 1:1400 or 1:1700, however these are the details that decorate your model.

There are some ways to do that, though. A ladder leading to hold and suchlike are the simplest ones to make as you cannot see their sides. To make it, just glue together a few wooden squares shifting them as you put them one onto another (pic. 47)

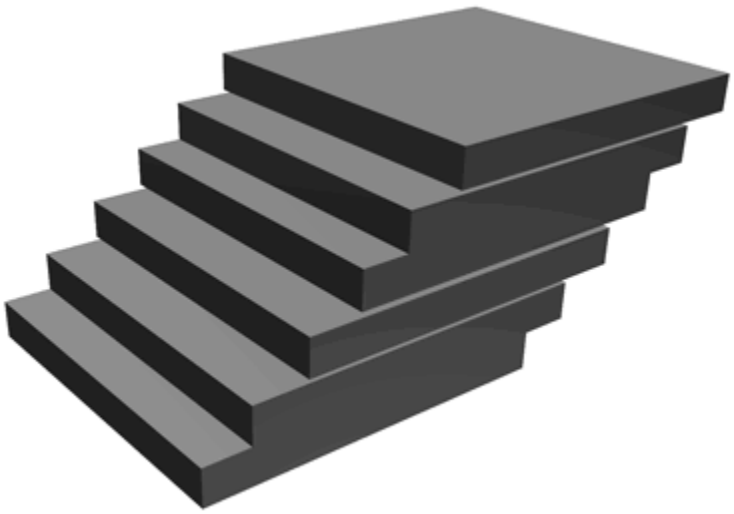

pic. 47 – to make a simple ladder, you have to glue together a few wooden squares shifting them as you put them one onto another

The ladders that can be seen from every side are more complicated. They consist of two side boards and a few horizontal steps which can be made of hard wood like apple or pear. Besides, those ladders can have railing. Before joining all parts together, you will need that wooden bar with a piece of sticky tape.

Stick a rib of one of the side boards to the bar (pic. 48). While the glue is drying out, prepare a few even steps: cut off one step across the grain, it will be your pattern, then using it cut off the rest of the steps.

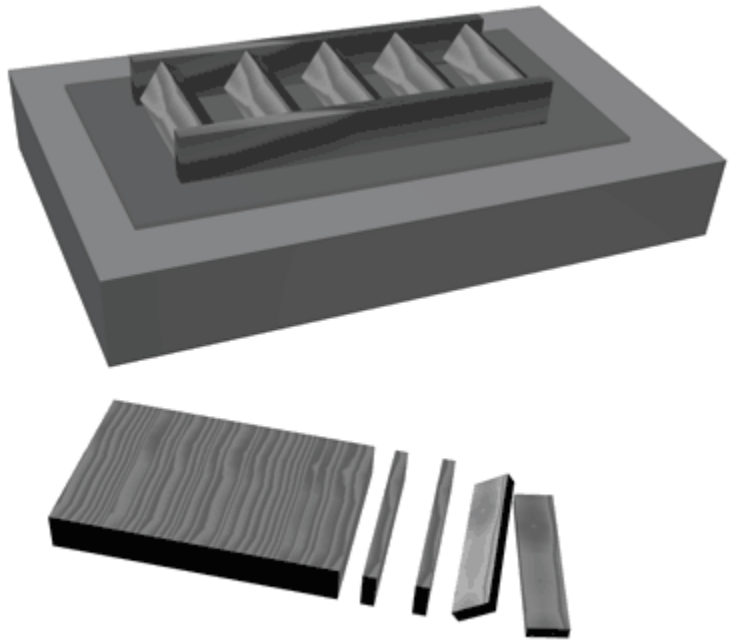

pic. 48 – assembly of a ladder

Now you are ready to assemble the ladder. Take a magnifying glass and tweezers and glue the step to the side which was attached to that wooden bar and make sure they have the same angle and distance between each other; after that, the second side is glued to them. After complete drying detach the ladder from the bar with a sharp knife. There might be some glue left on the reverse side, don't let it bother you: when you install the ladder, the glue will not be seen. The railing can be made of thin redwood sticks or other wood.

Woodlings on the masts.

Lower masts of big ships and bowsprits were made of a few banded squared bars called woodlings. Usually it consisted of 5 or 6 winds of a rope laid around the mast. Later iron hoops were used.

Of course, there is no point in making a mast out of a few squared bars, but it is recommended to equip the model with woodlings. Use the same wooden bar with a sticky tape; wrap a thin thread around it in 3-4 layers putting them very close to each other. Apply some PVA adhesive and, after it dries out, cut the stripe on the sides. You get a ribbon consisting of a few threads. Cut it into pieces of a necessary size and stick

to the mast. To make it fast and accurate, wrap the ribbon round the mast and cut it axially (just like you made rings out of wood or wire). The length of such pieces will coincide with the perimeter of the mast. To make the joint of woodlings less visible, put it into a back side facing the stern. Such woodlings look extremely real.

Oars.

The thought that you will have to make 40-50 oars for an old galley can make you upset, but don't be. There is a way to make a large number of them of any size.

Take a piece of copper wire and cut into pieces of a necessary length. Then even them by rolling along a flat surface. Squeeze the ends with pliers to make blades, and an oar is ready. Paint it any appropriate color or heat it over a fire which will give it a dark-brown color looking like wood. To fix the color, cover the oars with a layer of nitro lacquer.

Anchor chain.

Anchor chains were firstly used only in the 18 th century; before, anchors were held by shrouds. To make a simple anchor chain, join together two pieces of copper wire and squeeze them slightly with pliers. Heat it over a fire to make it dark. As you can see, the process is not complicated at all.

Life buoy.

Life buoys are easy to make and you will need them for models of modern ships. Take red or white wire insulation and cut it into a bunch of small rings, then paint the second half of a ring red or white depending on which color the ring is.

Blocks.

Sailing ships have had blocks since old times. The shape has remained the same since then. More than 200 models were used in fleet, but for a miniature vessel you will have to make only dead eyes and simplest blocks for putting the running rigging through.

At this step even an experienced model maker can face difficulties since the dead eyes of a model built on a scale of 1:450 are only 0,5-0,6 mm in diameter, and blocks are even smaller. That is why you won't be able to reproduce them with high accuracy, but only imitate them. Apply a drop of thick PVA adhesive to a necessary spot on an shroud which after drying will look like a dead eye or a block.

However , you can make the blocks look more real on bigger models. For that purpose use hard wood. When a model has a scale of 1:220, the diameter of a dead eye is about 1 mm. Cut them out of a thin wooden stick and drill holes placing them on a slot in a wooden brick. It is a very laborious process and, if you cannot drill the holes, you can glue turnbuckles to the work pieces (the turnbuckles are made in the same way as woodlings by joining together the threads)

Unlike dead eye, a wooden block requires only one opening. If you managed to drill three in the dead eye, then this will be a piece of cake for you. Ancient blocks can ve cut out of a wooden stick as well, but its section can be either round or oblong.

Reefs.

Reefs are a horizontal row of strings – reef beckets - which are put through a sail that enables to reduce the sail area when needed. To fortify the sail in the area where reef beckets are located, attach a stripe of sailcloth (reef bands) parallel to foot. One of the methods to make reef beckets and reef bands was described above. Let me add one more interesting way.

Take a piece of lawn about 5x5 cm of the same color as the running rigging of your model. With the help of pincers remove every other grain of fabric (or even more depending on a scale of the model) so that the fabric looks like gauze. Drop some glue onto the ends of the cloth and attach the reef band above. When the glue dries out, cut off the lawn leaving threads of 3-4 mon the sail. Turn the sail and repeat the procedure. As a result, you will get even rows of reef beckets. The piece of lawn can be used until it has no threads on it.

Body decorations.

Old vessels were richly decorated with c arved gilded figures; usually they were on the bow and stern. It is quite impossible to reproduce them on a miniature model; all you can do is to designate them with clean brass wire. To make them more relief, squeeze them slightly with ribbed pliers (you did that when you worked on a stern lamp). Of course, you should remember about a figurehead; cut it out of wood and paint golden.

Bunks and bunk mesh.

Some big ships had special sections called bunk mesh where sailors put rolled bunks. For imitation of those you can simply cut white wire insulation into pieces, but those made of fabric look better. Take a piece of lawn and cut it into pieces 5-6 mm in width

and 50-80 mm in length. Then put a stripe on a flat surface and apply some PVA adhesive, after that roll it up into a tube. You should get a thin tight stick; cut it into pieces, glue to each other like paling and attach to the model. Glue thin wooden slats, or thin wire, or threads depending on your design to imitate bunk mesh.

Ventilation pipes.

Natural ventilation goes through special pipes with wide funnels on the ends; the funnels are installed on the deck and are used for air intake or drawing out.

Large pipes for big ship have to be done of wood or metal while smaller ones can be made of copper wire. Squeeze one end with pliers and bend it until it reaches 90 º; then turn it upside down and squeeze again with the shorter end up. Grind this end off with a broach file almost up to the base. While grinding, there will appear a burr which imitates a socket of a pipe. Paint the ready pipe a desirable color.

Ship's bell.

Old vessels had only one bell which firstly was on the stern and later on the foredeck. Warships had two.

You can make it using a turning machine a brass wire, but it's better to use the method of moulding (see chapter "Rowing boats"). Use a metal rod as a form with an end in the shape of a cone. Paint the ready bell bronze and attach a tiny tongue made of copper wire. The said method is convenient as it allows you to make several perfectly identical details.

Work pieces for masts.

Round wooden sticks of any diameter can be easily made with chasing tool used for threading. Squeeze a work piece in a drill chuck and put it through a chaser of a necessary size; then repeat the operation with a chaser of a smaller size until the mast reaches the size you need. Finish it with sand paper without taking it out of the chuck.

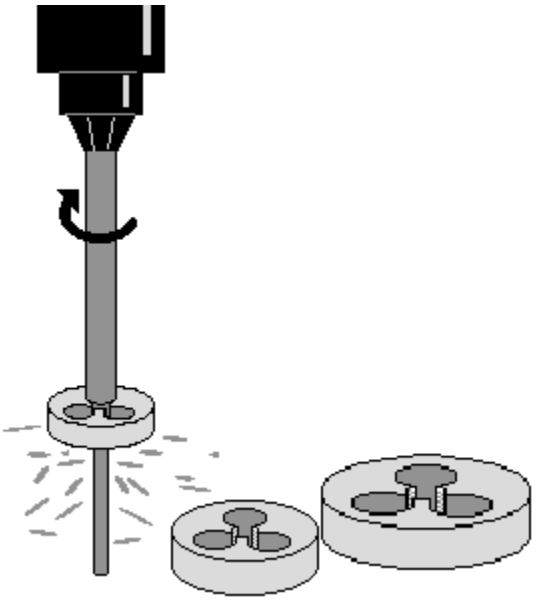

If you get a few chasers with the size 1,5 mm-5,0 mm and a pitch of 0,5 mm, it will allow you to make masts, yards and other round parts much faster.

Upcoming Shows

Start	End	Chapter	City/Area
04/06/2016	04/09/2016	*AMPS International Convention	Sumter, SC
04/08/2016	04/09/2016	Wright Field Scale Modelers **(WrightCon - IPMS/USA Region IV Convention)**	Dayton, OH
05/21/2016	05/21/2016	MMCL Invitational	Louisville, KY
Early Aug	Early Aug	IPMS/USA 2016 National Convention	Columbia , SC
09/17/2016	09/17/2016	Dayton Area Plastic Modelers	Dayton, OH
1 Oct 2016	Oct. 2016	Livonia, MI	

2016 Can-Am Contest News

By: Phil Meean

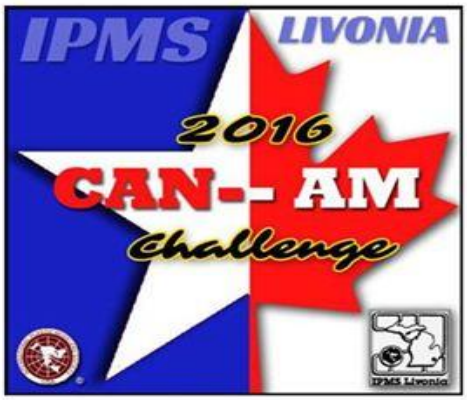

IPMS Livonia

Proudly Presents The

2016 Can/Am Modelling Challenge

Lou LaRiche CHEVROLET
www.SwitchToLaRiche.com

Sponsored by...

Nankin Hobby

Saturday, 1 October, 2016

Elks Lodge #2246 in Livonia, MI

Elks Lodge #2246 is at ***31117 Plymouth Rd. east of Merriman Rd. in Livonia, 48150***

This is an open MODEL CONTEST for all builders on both sides of the border. All IPMS eligible models are welcome regardless of previous contest placings. Category & Judging rules are available on the IPMS Livonia Website;

www.ipmslivonia.org

IPMS Livonia members will not be entering models for judging.

Special Awards will be given in the following categories:

Best Model by a Canadian Modeller — **Best Model by an American Modeler**
Best Canadian Marked Subject — **Best American Marked Subject**
Best Can-Am Challenge Car (50th Anniversary) — **Best Spitfire (80th Anniversary)**
Best Star Trek Subject (50th Anniversary) — **Best Jeep (75th Anniversary)**
Best Out-Of-Box 40 Year Old Kit (IPMS Livonia 40th Anniversary)

SCHEDULE
Vendor's set-up only: 7:00 AM
Contest Registration Open: 9:00 – 12:30
Judges Meeting Starts: 12:00 Noon
Awards: Immediately following judging
Building Closes: 5:00 PM

ADMISSION
Contestant Admission (includes 4 Entries): **$10**
Additional model entries: **$1 Each**
Junior Contestants (17 and under, unlimited entries): **$5**
Visitors: $3 per Adult or Family for $5
Vendor Tables (8' Length): **$20**

Vendor Contact: **Ian Dow** – (734) 564-6448 - iandow1030@gmail.com
Contest Questions: **Steve Freeman** - stevebfreeman@comcast.net

Members,

This will be the future location of any news or updates about our upcoming show to help keep the membership informed as too what we as a committee are doing and any relatable news that the club needs access too. I will just do a brief bullet point update and will keep it short and concise so that the information is available without being overwhelming. If there are questions or comments please feel free to direct them at me and I will respond as quick as possible. The goal is to not overwhelm the club with information that they may not need or want, but will also be able to keep those interested into what we are doing for the contest.

Date of Show:

October 1, 2016 at the Elks Lodge at 31117 Plymouth Road in Livonia.

Volunteers Needed For the Following Positions:

1. Registration.

2. Raffle.

3. General Help in guiding vendors or participants to room locations as well as set up.

4. Judging

This list will likely grow and evolve but these are some of the positions needed now. We will also not be recruiting anyone to be "stuck" in one position all day. No one needs to be doing the raffle all alone all day, these positions will have a certain set of hours and we will move you out or around. This is suppose to be fun and an enjoyable event by us.

Sponsorship Packages.

1. Currently our sponsorship package is going to be $25 which will cover a Gold, Silver, Bronze for each category. We are anticipating 60 categories with splits. This may change, but we will see as the planning evolves.

2. We are looking to have all categories sponsored so that we do not pay from our club pocket. We are also looking for any donations that people are willing to make on behalf of the show. If they do not want to sponsor a category but are willing to donate, a few bucks then we will gladly accept and put it towards our costs.

3. We will accept kit donations for the raffle as well.

4.***All checks need to have John Kesner name on them so they can be deposited. They can also have IPMS Livonia, but Johns name must be on it also.***

Mess Hall.

By: Grunty the Magic Pig

Mandarine Orange Spinach Salad with Chicken and Lemon Honey Ginger Dressing

Yield: About 4 servings

Ingredients

Dressing

- 1/4 cup olive oil
- 1/4 cup canola oil
- 1 tsp lemon zest
- 3 1/2 Tbsp fresh lemon juice
- 2 Tbsp honey
- 2 Tbsp peeled and grated ginger
- 1 clove garlic
- 1 tsp dijon mustard (Emeril's is the only way to go)
- 1/4 - 1/2 tsp salt, to taste

Wonton strips

- 12 wonton wrappers, sliced into 1/2-inch thick strips
- Vegetable oil, for frying
- Cinnamon

Salad

- 1 lb boneless skinless chicken breast, grilled and sliced
- 1 cup sliced almonds, toasted
- 10 oz baby spinach
- 2 cups snow peas, sliced into halves
- 1 1/2 cups matchstick carrots
- 1 red bell pepper, seeded and diced
- 1 1/2 (15 oz) cans mandarine oranges (no sugar added), drained well (fresh would work too)
- 1/2 cup cilantro, stems removed

Black and white sesame seeds, for garnish (optional)

Directions

- For the dressing:
- Add all ingredients to a blender and pulse until well emulsified and ginger and garlic are finely minced. Pour into an airtight container and all to rest in refrigerator while preparing salad (shake or stir before adding to salad).
- For the wonton strips:
- Heat about 3/4 to 1-inch of oil in a skillet to 360 degrees (maintain this temperature, reduce heat as needed). Add just enough wonton strips without overcrowding. Fry just until halfway cooked, then using metal tongs (grabbing as many as you can at once) rotate to opposite side and cook until just lightly golden. Remove and drain on a plate lined with paper towels. Immediately sprinkle lightly with cinnamon and salt before they dry.
- For the salad:
- Add all salad ingredients to a large salad bowl and toss. Drizzle with dressing and gently toss. Top each serving with desired amount of wonton strips and optional sesame seeds. Serve immediately.
- Recipe source: Cooking Classy